Performance analysis of Speed Control of PMSM based on Artificial Neural Network

Dr. Aishwarya Apte

Electrical Engineering Department

AISSMS College of Engineering Pune

Abstract

Permanent Magnet Synchronous Motors (PMSMs) are widely used in electric vehicles, industrial automation, robotics, and high-performance drive applications due to their high efficiency, high power density, compact size, and excellent dynamic performance. However, conventional speed control techniques, such as Proportional-Integral (PI) controllers, may exhibit limitations under varying operating conditions, parameter uncertainties, nonlinearities, and sudden load disturbances. To overcome these limitations AI based controllers are used. Adaptive and Self-Learning Capability AI-based controllers can learn from operating conditions and adjust parameters automatically. AI algorithms such as neural networks and fuzzy logic can handle nonlinear and complex motor dynamics more effectively than conventional controllers (like PI/PID). This results in more precise speed and torque control. This paper aims to comprehensively delineate the applications of AI within the realm of electric motors, specifically focusing into drive control and health maintenance The proposed ANN-based controller is implemented and simulated using MATLAB/Simulink. Its performance is assessed in terms of rise time, settling time, overshoot, steady-state error, and disturbance rejection capability. The results are compared with those obtained using a conventional PI controller. Thus, ANN-based speed control offers a promising intelligent control solution for high-performance PMSM drive applications.

Introduction

Permanent Magnet Synchronous Motors (PMSMs) have gained considerable attention in recent years due to their superior performance characteristics, including high efficiency, high power density, high torque-to-inertia ratio, low maintenance requirements, and excellent dynamic response. These features make PMSMs suitable for a wide range of applications, such as electric vehicles, industrial automation, robotics, aerospace systems, and precision motion control. Compared with conventional induction motors, PMSMs offer improved efficiency and power density because the rotor magnetic field is generated by permanent magnets, eliminating the need for rotor excitation current.

With the increasing demand for high-performance electric drive systems, accurate and reliable speed control of PMSMs has become an important area of research. The dynamic behaviour of a PMSM is highly nonlinear and depends on several operating parameters, such as stator resistance, inductance, rotor flux linkage, load torque, and rotor speed. Variations in these parameters, along with sudden load disturbances and changes in operating conditions, can significantly affect the performance of the motor drive. Therefore, the development of an effective speed control strategy is essential to achieve accurate speed tracking, fast dynamic response, and stable operation under varying load conditions.

Conventionally, Proportional-Integral (PI) controllers are widely employed for PMSM speed regulation due to their simple structure, ease of implementation, and satisfactory performance under nominal operating conditions. In a conventional control scheme, the PI controller generates the reference torque-producing current based on the difference between the reference speed and actual motor speed. However, the performance of a PI controller is strongly dependent on appropriate gain selection and system parameters. Its performance may deteriorate when the motor operates under wide speed variations, parameter uncertainties, nonlinear conditions, and sudden changes in load torque. Moreover, fixed controller gains may not provide optimum performance over the entire operating range of the PMSM.

To overcome these limitations, intelligent control techniques have attracted significant interest in electrical drive applications. Artificial Intelligence (AI)-based approaches, particularly Artificial Neural Networks (ANNs), offer an alternative solution for controlling nonlinear and complex systems.

In this [1] paper proposes an ANN-based sensorless control method for estimating rotor speed and position of PMSM. The proposed ANN estimates the rotor speed and position without mathematical modeling, as it learns the nonlinear relationships through forward and backward propagation learning processes. Moreover, the proposed control method maintains high estimation accuracy even under parameter variations. In [2]this paper, a HSPMSM FCS-MPCC based on the incremental model is employed, and the ANN algorithm is improved by combining momentum and variable step size for online identification of inductance and resistance parameters. The improved algorithm shows significant improvements in both identification accuracy and speed. By incorporating the identified parameters into the predictive model, current fluctuations caused by parameter mismatch are eliminated. To reduce computational burden and obtain better control performance, this article [3] presents an ANN-MPC control strategy for a permanent magnet synchronous motor. The main advantage of the ANN-MPC controller is that it significantly reduces the computational burden and resource consumption while maintaining excellent control

performance. This study [4] focuses on the various control strategies of PMSM traction drive trains used in EVs (electric vehicles). It describes different control strategies of PMSMs based on classical control, modern control, and intelligent control. A novel hybrid robust intelligent control approach is proposed in this study[5], integrating an artificial neural network (ANN) within a robust predictive speed control framework for permanent magnet synchronous motor (PMSM) based electric vehicle propulsion systems. In this article[6], a novel DO-CSM speed controller is proposed for the field-oriented controlled three-phase SMPMSM drive system. In such a rotor speed controller, the signum-function-based CSM controller is used as the rotor speed controller for the rotor speed tracking control and the STSMO is adopted as the DO for the lumped disturbance compensation.
In the proposed work, an ANN-based speed control strategy is developed for a Permanent Magnet Synchronous Motor drive. The ANN controller is designed to learn the relationship between the speed error, change in speed error, and the required control signal. The network is trained using suitable input-output data to obtain the desired control characteristics. The trained ANN is integrated into the PMSM drive control system to regulate motor speed and improve its dynamic performance. The proposed control strategy is investigated under different reference speed commands and load torque variations to examine its speed-tracking and disturbance-rejection capabilities.
The proposed ANN-based controller is implemented in MATLAB/Simulink, and its performance is evaluated using important dynamic performance indices such as rise time, settling time, maximum overshoot, steady-state error, and response to load disturbances. Furthermore, the performance of the ANN-based controller is compared with that of a conventional PI controller under identical operating conditions. This comparative analysis helps to evaluate the effectiveness and suitability of ANN-based intelligent control for PMSM drive applications.
The main objective of this research is to investigate the application of artificial neural networks for achieving efficient and accurate speed regulation of PMSM drives. The study aims to demonstrate the potential of ANN-based control in addressing the limitations of conventional controllers and improving the performance of electric drive systems under varying operating conditions.

Mathematical Modelling of PMSM

In order to develop the mathematical model of PMSM motor, variables from three phase stator reference frame are transformed into two phase rotor reference frame. The rotor flux linkages are on the d-axis of the machine. Also, it is assumed that the inductance are independent of the rotor position. The generalized non-linear mathematical model of PMSM motor in rotor reference frame is given in Eq.(1) [9].

$$\begin{aligned} v_d &= R_s i_d + L_d \frac{di_d}{dt} - L_d \omega i_q \\ v_q &= R_s i_q + L_q \frac{di_q}{dt} + L_q \omega i_d + \lambda_f \omega \\ T_e &= J\frac{d\omega_m}{dt} + B\omega_m + T_L \\ T_e &= \frac{3}{2}\frac{P}{2}(\lambda_f + (L_d - L_q) i_d) i_q \end{aligned} \qquad (1)$$

where vd, vq are the stator voltages, id, iq are stator currentsand Ld,Lq are the inductances in d-q axes, RS is the stator resistance, ω the rotor velocity, P no. of poles , λf is rotor flux linkages. Here surface mounted PMSM (SPMSM) is considered for which Ld = Lq = L. Rearranging eqn(1) for SPMSM and the model in state variable form reduces to

$$\begin{aligned} \frac{di_q}{dt} &= \frac{v_q}{L} - \frac{R_s}{L} i_q - \omega i_d - \frac{\lambda_f}{L}\omega \\ \frac{di_d}{dt} &= \frac{v_d}{L} - \frac{R_s}{L} i_d + \omega i_q \\ \frac{d\omega}{dt} &= \frac{K_t}{J} i_q - \frac{B}{J}\omega - \frac{P}{2 * J} T_L \end{aligned} \qquad (2)$$

where $[iq\ id\ \omega]^T$ are states of the system

Conventional PI Speed Controller

The motor model develops in section (2) is used for speed control using PI controller. Conventionally field oriented or vector control is implemented for this. Block diagram of vector control of PMSM is given in Fig.(1) Vector control of PMSM shown in Fig. has three loops, outermost is speed loop and two inner current loops. Vector control requires transformation of three phase currents to two phase rotating reference frame d - q frame. Three phase currents from motor are measured and transformed to two phase using Parks transformation. Outermost loop speed loop. Speed is measured using speed

sensor. Reference speed is compared with measured speed and error is used as input to speed PI controller. Output of speed PI controller is torque demand. Torque component of current is i_q so torque demanded is compared with actual i_q and is given to current PI controller. One more PI controller is in third loop, where flux component of current i.e. id is compared. Reference value of id = 0 as maximum torque control strategy is used.

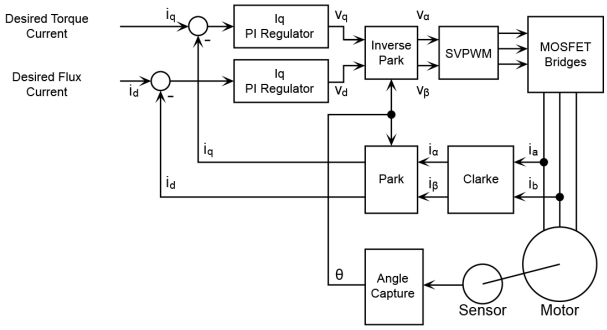

Fig.1 Block diagram of PI based PMSM Control

Simulations are carried out first to maintain speed at reference value for different torque. For simulations speed is kept constant at 314rad/sec. Rated torque of 2:43N-m is applied at t = 0:2sec. Fig2-3 shows speed and torque for the specified case.

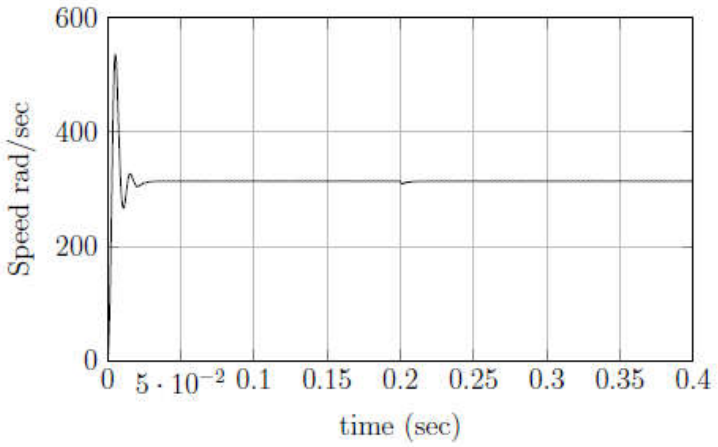

Fig.2 Speed for Torque of 2.43N-m

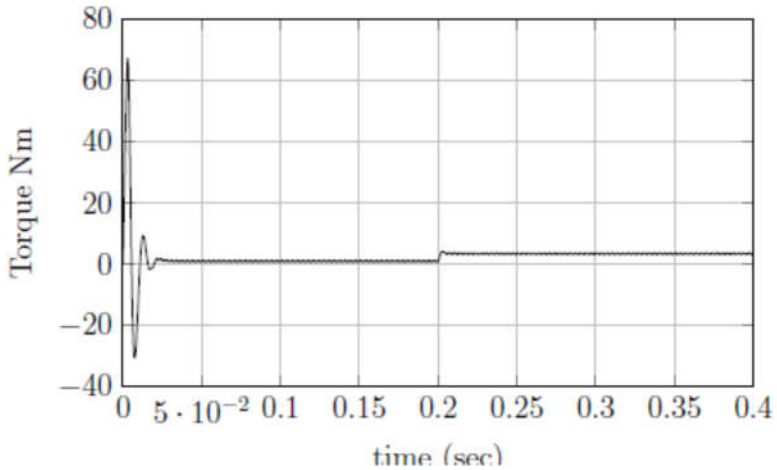

Fig.3 Torque 2.43N-m

ANN-Based Speed Controller Design

ANN consists of interconnected processing units called **neurons or nodes**. These neurons are arranged in three main layers: input layer, hidden layer, and output layer. The input layer receives data from the external system.The hidden layer processes the received information through interconnected neurons. The output layer generates the desired response. Each connection between neurons is associated with a numerical value called a **weight**. A bias is added to the weighted sum to improve the flexibility of the network. An activation function determines the output of each neuron. ANN learns by adjusting weights and biases during the training process.In supervised learning, the network is trained using input-output data pairs. The difference between actual and predicted output is calculated using an error function. Backpropagation is commonly used to minimize this error. The weights are updated using optimization algorithms such as gradient descent. ANN is capable of learning complex nonlinear relationships. In PMSM speed control, ANN can be trained using speed error and other motor parameters. The trained ANN controller generates suitable control signals to achieve accurate speed regulation under varying operating conditions.

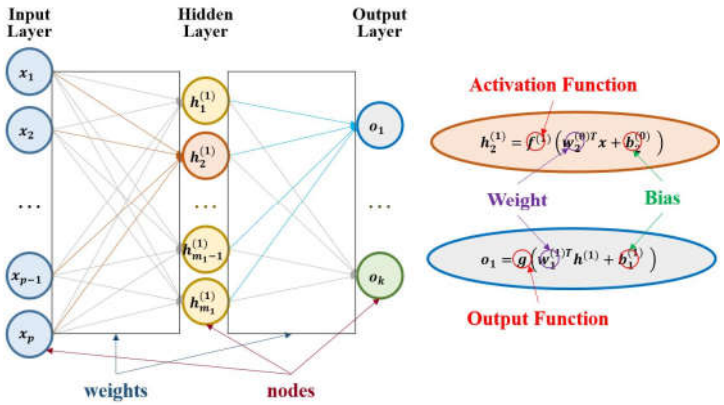

Fig 4: Basic architecture of an Artificial Neural Network

For PMSM speed control, the ANN can be trained using the speed error and change in speed error as input variables. The desired controller output is obtained from a reference controller, such as a conventional PI controller. The mean squared error is expressed as:

$$MSE = \frac{1}{N}\sum_{i=1}^{N}(Ti - Yi))^2$$

Where:

- Ti = Target output
- Yi = ANN predicted output
- N = Number of training samples

The training process continues until the specified error tolerance or stopping criterion is achieved.

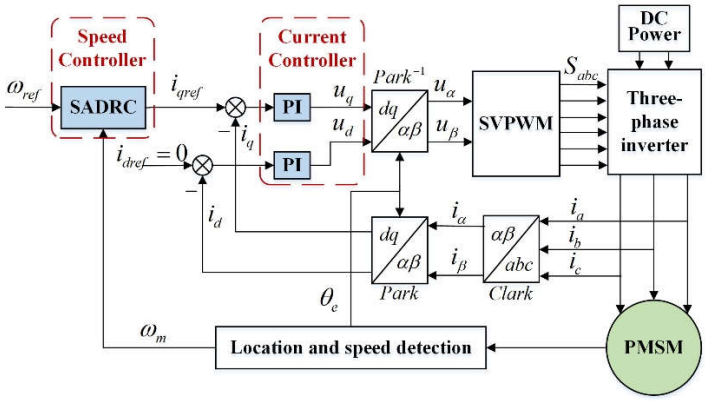

Fig.5 Block diagram of ANN based speed Control of PMSM

Simulations carried out on PMSM motor with trained ANN controller. Results of speed regulated at 1000 rpm are shown in fig.6. Electromagnetic torque of 3N-m applied at 5 sec.

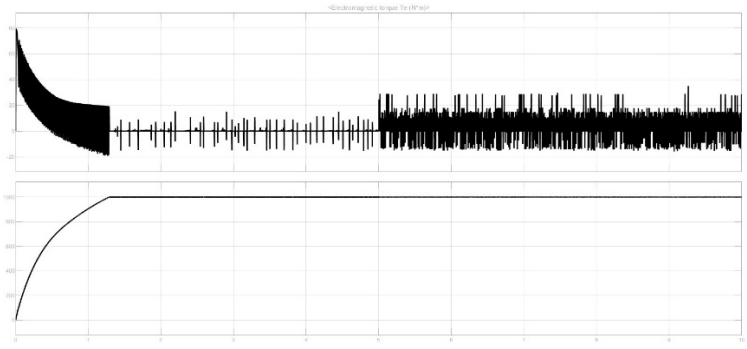

Fig.6 Speed and Torque of ANN based controller

Conclusion

Results of conventional controller and ANN based controller fig.3 and fig.6 shows that PI controller gives large overshoot of 77% whereas ANN based controller there is no overshoot. This reduces stress on power electronic devices. ANN based controllers can handle parameter uncertainties and unknown disturbances better way than conventional controllers.

References

1. G. Kim, J. Choi and Y. Bak, "ANN-based Sensorless Control Method for Estimating Rotor Speed and Position of PMSM," *2026 International Power Electronics Conference (IPEC-Nagasaki 2026 - ECCE Asia)*, Nagasaki, Japan, 2026, pp. 1-5, doi: 10.23919/IPEC-Nagasaki2026-EC64663.2026.11596907.

2. S. Jin, B. Wang, D. Dai, P. Sun, G. Liu and L. Jin, "Robust Model Predictive Control for High-Speed PMSM Based on Novel Adaline Neural Network," in *IEEE Transactions on Industry Applications*, vol. 62, no. 3, pp. 4843-4852, May-June 2026, doi: 10.1109/TIA.2025.3649449

3. S. Pang *et al*., "A Virtual MPC-Based Artificial Neural Network Controller for PMSM Drives in Aircraft Electric Propulsion System," in *IEEE Transactions on Industry Applications*, vol. 60, no. 2, pp. 3603-3612, March-April 2024, doi: 10.1109/TIA.2023.3338605.

4. Alex V., A. Rammohan, Chapter 13 - Drive control strategies for PMSM drives in electric vehicles, Editor(s): V. Indragandhi, R. Elakkiya, V. Subramaniyaswamy, In Advances in Intelligent Energy Systems, Green Machine Learning and Big Data for Smart Grids, Elsevier, 2025, Pages 185-197, ISBN 9780443289514

5. Amel Kasri, Youcef Belkhier, Mohamed Benbouzid, Integral-action predictive speed control with neural network current regulation for PMSM electric vehicle drives: Co-simulation hardware-in-the-loop validation, Next Energy, Volume 13, 2026, 100992, ISSN 2949-821X, https://doi.org/10.1016/j.nxener.2026.100992

6. Y. -C. Liu, S. Laghrouche, D. Depernet, A. Djerdir and M. Cirrincione, "Disturbance-Observer-Based Complementary Sliding-Mode Speed Control for PMSM Drives: A Super-Twisting Sliding-Mode Observer-Based Approach," in *IEEE Journal of Emerging and Selected Topics in Power Electronics*, vol. 9, no. 5, pp. 5416-5428, Oct. 2021, doi: 10.1109/JESTPE.2020.3032103.

7. R. Errouissi, M. Ouhrouche, W. H. Chen, and A. M. Trzynadlowski, "Robust nonlinear predictive controller for permanent-magnet syn-chronous motors with an optimized cost function," *IEEE Transactions on Industrial Electronics*, vol. 59, pp. 2849–2858, July 2012.

8. H.Liu and S.Li, "Speed control for pmsm servo system using predic- tive functional control and extended state observer," *IEEE Trans Ind. Electronics*, vol. 59, pp. 1171–1183, February 2012.

9. R. Krishnan, *Permanent Magnet Synchronous and Brushless DC Motor Drives*. CRC Press, 2010.

10. A.A.Apte, R.A.Walambe, V.A.Joshi, K.Rathod, and J.P.Kolhe, "Sim- ulation of a permanent magnet synchronous motor using matlab- simulink," in *India Conference (INDICON), 2014 Annual IEEE*, pp. 1–5, Dec 2014.

11. A. Apte, V. A. Joshi, H. Mehta and R. Walambe, "Disturbance-Observer-Based Sensorless Control of PMSM Using Integral State Feedback Controller," in *IEEE Transactions on Power Electronics*, vol. 35, no. 6, pp. 6082-6090, June 2020, doi: 10.1109/TPEL.2019.2949921

12. A. Apte, U. Thakar and V. Joshi, "Disturbance observer based speed control of PMSM using fractional order PI controller," in *IEEE/CAA Journal of Automatica Sinica*, vol. 6, no. 1, pp. 316-326, January 2019, doi: 10.1109/JAS.2019.1911354.